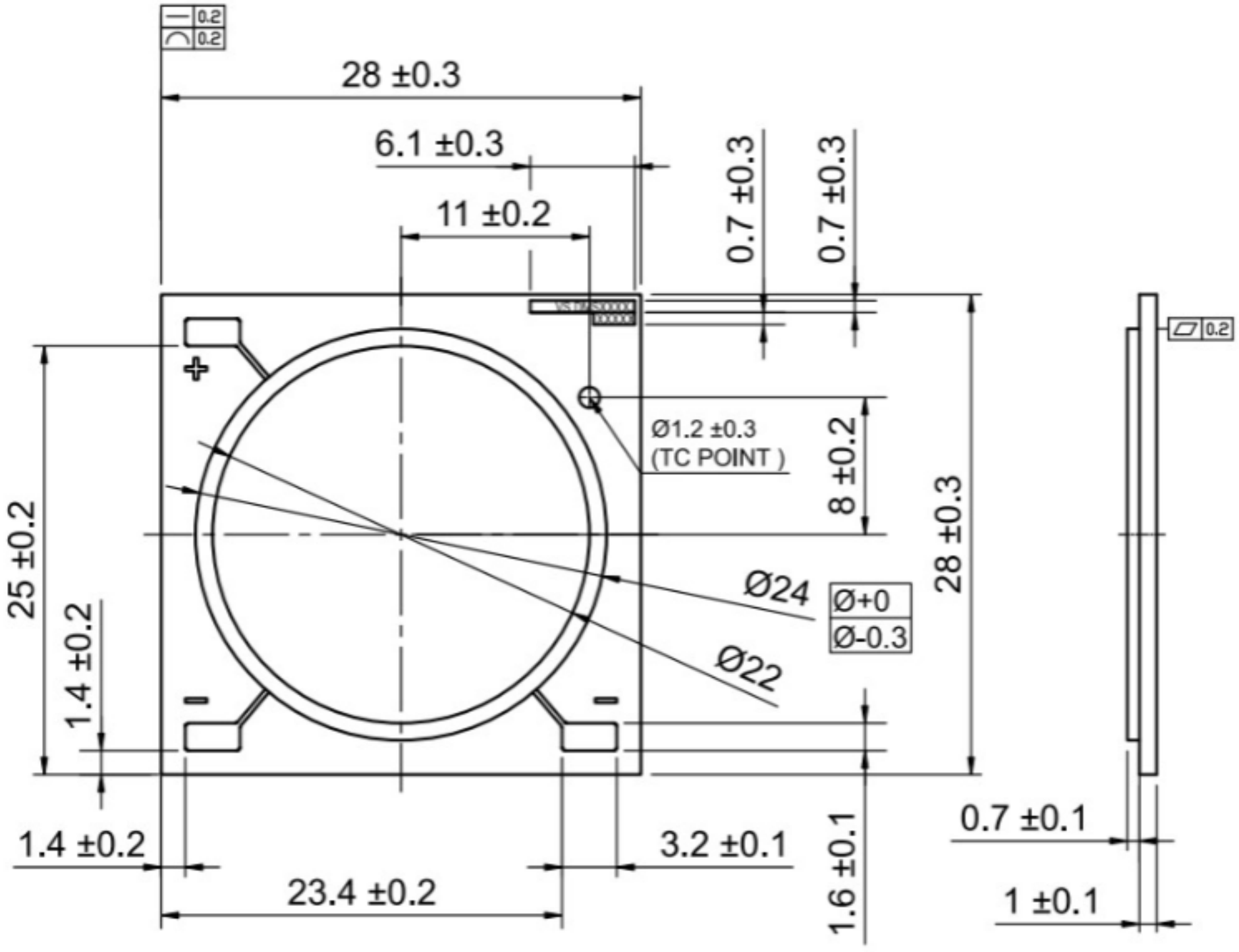
0.2
0.2
28 ±0.3
6.1 ±0.3
11 ±0.2
0.7 ±0.3
0.7 ±0.3
Ø1.2 ±0.3
(TC POINT )
8 ±0.2
28 ±0.3
25 ±0.2
Ø24
Ø+0
Ø-0.3
Ø22
1.4 ±0.2
1.4 ±0.2
3.2 ±0.1
23.4 ±0.2
1.6 ±0.1
0.2
0.7 ±0.1
1 ±0.1